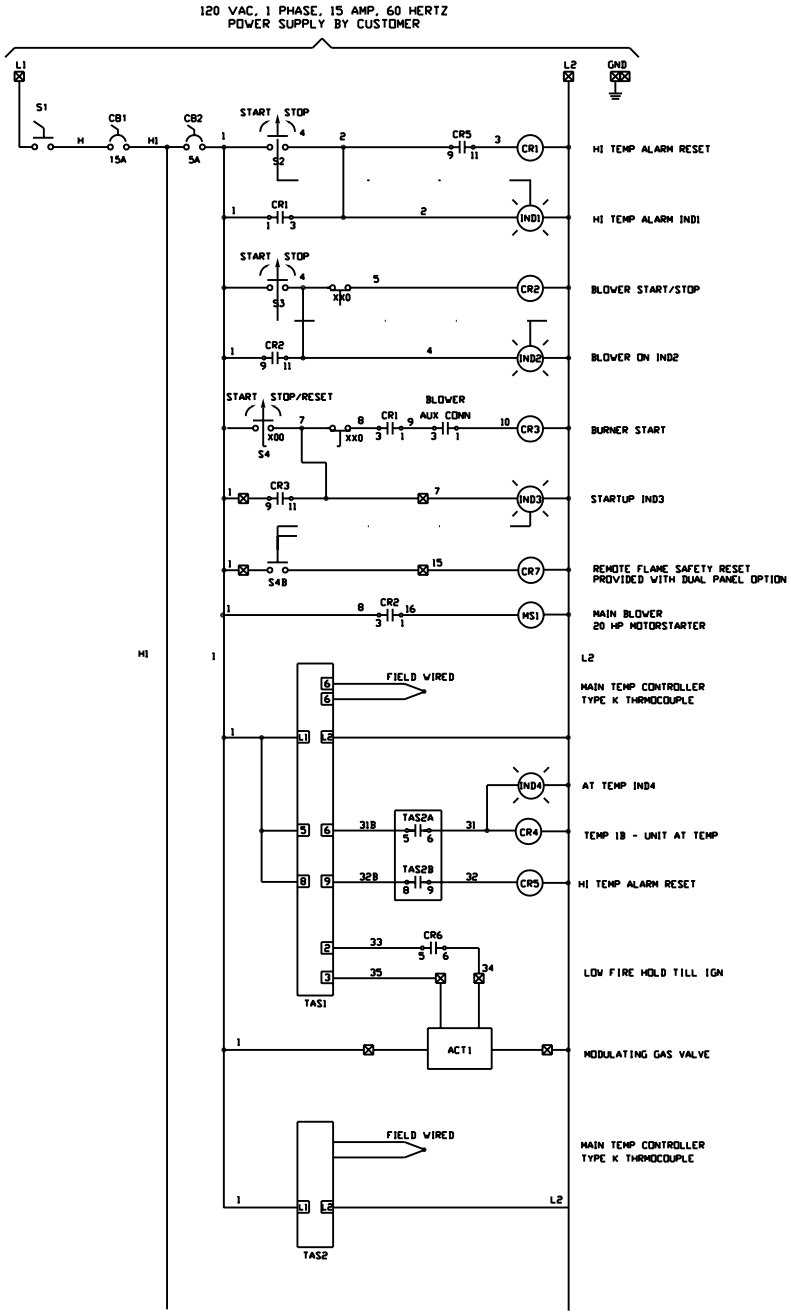

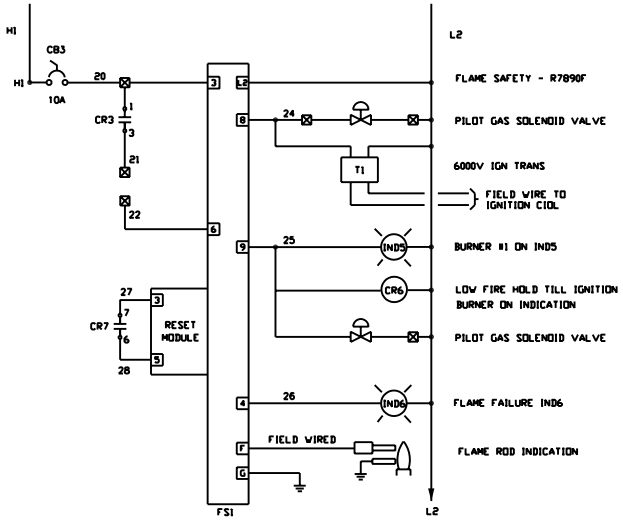

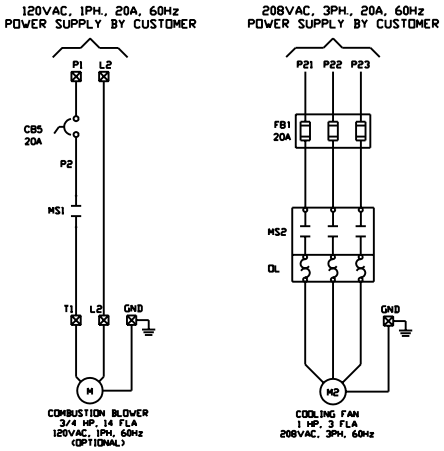

CONTACTS FOR REMOTE OPERATION

4 — PS1 — AS1 — 5	REMOTE INPUT - PRESSURE SWITCH REMOTE INPUT - AUX. SAFETIES REMOTE INPUT - NC BURNER OFF
1 — CR2 — 16	BLOWER COIL WIRE
11 — CR6 — 12	REMOTE OUTPUT - BURNER STATUS
13 — CR4 — 14	REMOTE OUTPUT - UNIT AT TEMP
1 — 15	REMOTE FLAME FAILURE RESET OPTION

HTT HI TEMP TECH CORP

SCALE: NONE	APPROVED BY	DRAWN BY SRP
DATE: 10-14-04		REVISED
HTT CATOX SYSTEM 2FM-CAT-BL-G		
		DRAWING NUMBER GENDWG1E1